SUSTAINABLE ESSENTIAL SKILLS

Trades Worksheets Book Two

BUILDFORCE CANADA

SKILLPLAN

Introduction

What is the purpose of this collection of worksheets?

These worksheets are part of a project to encourage integrating Essential Skills into technical training. The worksheets address competencies that are outlined in the National Occupational Analysis and are part of every trades training curriculum, regardless of region or level. The content originated in trades training curricula but is enhanced with features that make Reading, Document Use and Numeracy tasks transparent.

The purpose of this collection of worksheets is to

- provide ready-made materials for instructors to use
- model an Essential Skills approach that integrates Essential Skills strategies into technical training topics
- provide a means to assist apprentices who find technical training difficult

Who should use these worksheets?

Technical instructors can decide which worksheets are appropriate for individual apprentices, study groups and classes. Educators in settings that prepare students for apprenticeship or who have an interest in work-related applications may find some worksheets appropriate.

Why use these worksheets?

Each worksheet activity was suggested and reviewed by an experienced trades instructor. The trades topics are useful for more than one trade. For example, several trades use fan laws; however, this topic is only discussed in one of the workbooks under one trade.

The worksheets provide practice and strategies to reinforce concepts instructors present in class. Instructors can use them with apprentices to review and to teach using a clear process that can become a transferable strategy. The activities have been carefully selected to identify technical training topics that are problematic for apprentices.

Integrating Essential Skills into worksheets helps apprentices develop transferable skills including:

- locating and integrating information from complex text and information displays that use technical terms, abbreviations and symbols
- translating problems into mathematical operations using several steps of calculation and a combination of formulae

How can the worksheets be used?

The worksheets are arranged in three workbooks ordered alphabetically by trade. A complete listing of the topics in all three workbooks is on the back inside cover.

Instructors can choose worksheets as they fit into their curriculum or to supplement existing study materials or as a class learning activity. Worksheets can also be used with apprentices who need extra practice.

Instructors can also look beyond the topic and examine the layout and concepts addressed. They can develop their own content using these ideas to integrate the Essential Skills appropriate for their apprentices and trade application.

How can instructors participate in this project?

These workbooks and accompanying instructor's guide are part of a project to integrate Essential Skills into technical training. You are invited to join the growing community of technical training instructors who are learning more about Essential Skills and how this approach can facilitate effective trades training and increase success for more apprentices.

Here is how you can participate now and in the future:

- Download copies of these workbooks and other related publications at www.buildforce.ca.
- Use these materials with your apprentices
- Design your own materials using the same Essential Skills features

The completed project envisions a virtual community of technical training instructors who will post their own worksheets and other materials to share with instructors across Canada. There will be opportunities for networking online, a 1-800 information service, and instructor training courses. The goal of these initiatives is to inspire instructors to add to their credentials by meeting the requirements of a formal Essential Skills endorsement program.

Table of Contents

Heavy Equipment Operators

Heavy Equipment Operators operate heavy equipment including excavators, backhoes, dozers, loaders and articulated haul trucks for heavy construction: earth moving, road building, mining and forestry projects. Certified operators are responsible for basic maintenance of equipment, safety around equipment, and following and protecting markers, grades and stakes.

Activities

The first two activities provide the strategies and knowledge required by the third activity.

- Calculating the Width of a Trench
  Uses slope ratio to calculate the horizontal distance
- Compaction and Swell Factors
  Calculates volume including the percent volume due to compaction or swell
- Calculating the Volume of an Excavation
  Combines the strategies from the previous activities to calculate volume of an excavation

Jurisdictional Requirements

Jurisdictional requirements include:

- Describing expressions of slopes and grades
- Interpreting drawings and plans

Essential Skills Highlights

This activity combines Document Use and Numeracy skills at Level 3.

Document Use

- Locate and integrate information on diagrams and tables

Numeracy

- Make multiple steps of calculations
- Translate a problem into a set of mathematical operations using several steps of calculation and a combination of formulae

Calculating the Width of a Trench

Slope ratios compare the horizontal distance to the vertical distance.

1.5:1

Horizontal distance or offset of the slope

Vertical distance or difference in elevation

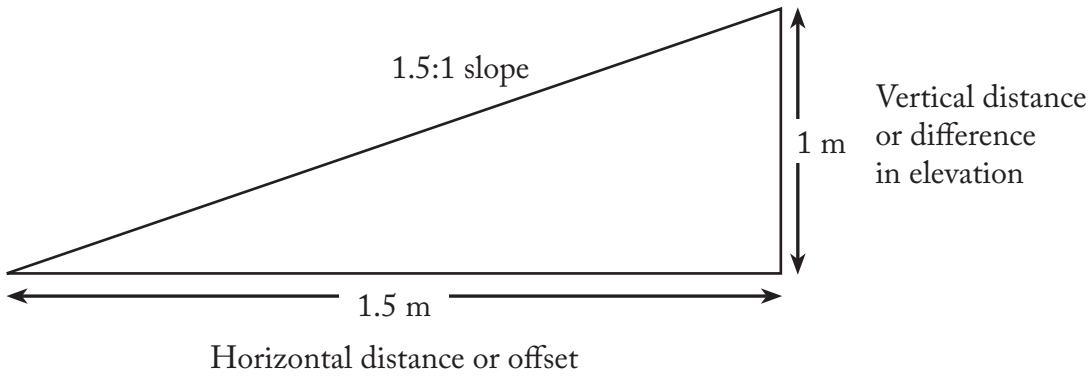

Note: The vertical distance is the difference in elevation and is sometimes called the rise or fall.

WorkSafe has three slope ratios:

Class A: ¾ : 1

Class B: 1:1

Class C: 1.5:1

Note: The slope ratio at the training site is 1.5:1 because of loose sandy material.

Example: 1

Calculate the total width of the trench at the top. The slope ratio is ¾:1.

Step 1: Calculate the horizontal distance (HD).
HD = slope ratio × work =
¾ × 7 m = 0.75 × 7 m = **5.25 m**

Step 2: Calculate the width of the trench at the top.
Width of trench =
5.25 m + 1.2 m + 5.25 m = **11.7 m**

Dotted lines represent the width of the bucket.

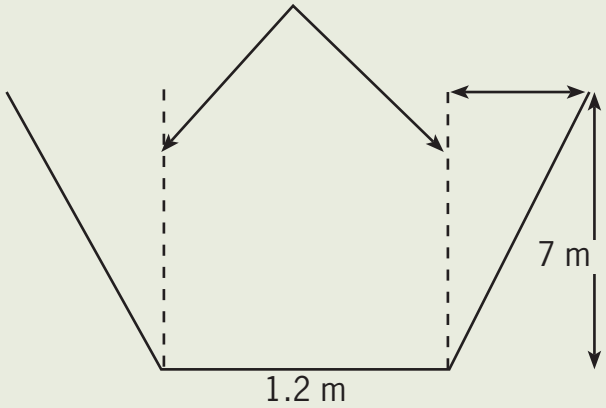

Using Compaction and Swell Factors

Swell/Compaction Factors		
	Swell	**Compaction**
Pit Run Gravel	12%	11%
Sand	12%	11%
Topsoil	40%	29%
Common Earth Loam	25%	20%
Clay	22%	18%
Gravelly Clay, Hardpan	18%	15%
Rock	40%	30%

Example: 1

An excavation measures 12 m long, 3.5 m wide and 1.2 m deep. The material is topsoil. A truck holds 10 m^3 per load. Calculate the number of truck loads needed to remove the topsoil, including swell, from the site.

Step 1: Calculate the volume of banked material.
$V = L \times W \times H = 12\ m \times 3.5\ m \times 1.2\ m = 50.4\ m^3$

Step 2: Calculate the total volume including swell.
Swell factor for topsoil = 40%
100% + 40% = 140% = 1.4
Total volume = $1.4 \times 50.4\ m^3 = 70.56\ m^3$

Step 3: Calculate the number of truck loads needed.
# of trucks = $70.56\ m^3 \div 10\ m^3 = 7.056$ = **8 truck loads**

Example: 2

An excavation that measures 5.75 m long, 4.5 m wide and 1.45 m deep needs to be filled in with common earth loam. Calculate the volume of common earth loam that is needed to fill in the excavation including the extra material needed for compaction.

Step 1: Calculate the volume.
$V = L \times W \times H = 5.75\ m \times 4.5\ m \times 1.45\ m = 37.51875\ m^3$

Step 2: Calculate the total volume including compaction.
Compaction factor for common earth loam = 20%
100% + 20% = 120% = 1.2
Total volume = $1.2 \times 37.51875\ m^3$ = **45.0225 m^3**

Calculating the Volume of Excavated Material

Example:

Calculate the volume of pit run gravel including the increase due to swell that needs to be excavated. Calculate the number of trucks needed to remove the material. A truck holds 8 m^3. Use the slope ratio 1.5:1. The height of the excavation is 1.6 m.

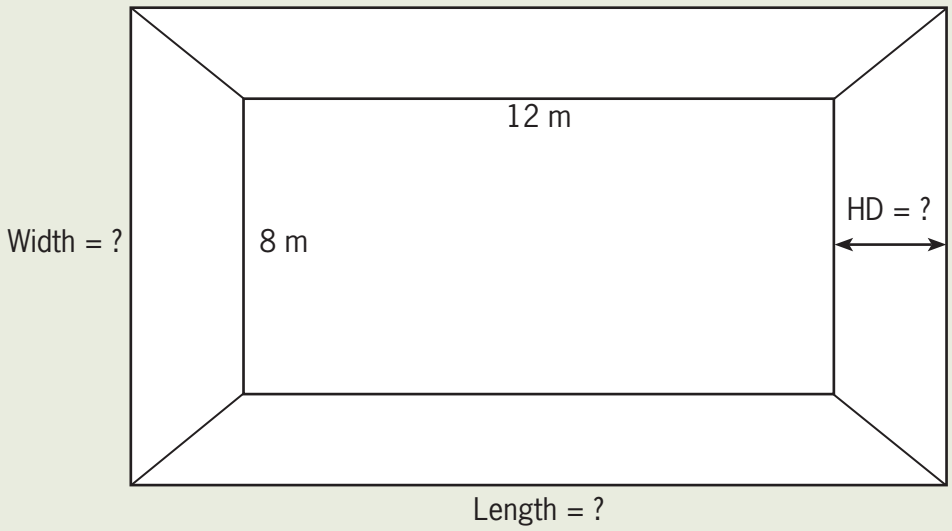

Step 1: Calculate the horizontal distance (HD).
The slope is 1.5:1.
Horizontal Distance = Slope × Work = 1.5 × 1.6 = 2.4 m

Calculate the length and the width of the top of the excavation.
Length = 2.4 m + 12 m + 2.4 m = 16.8 m
Width = 2.4 m + 8 m + 2.4 m = 12.8 m

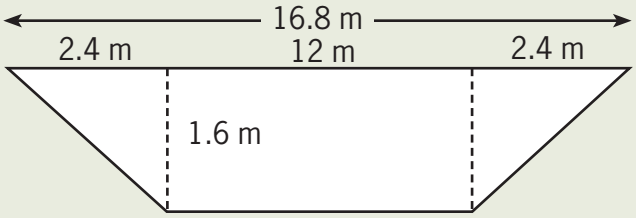

12 m Length
Side View

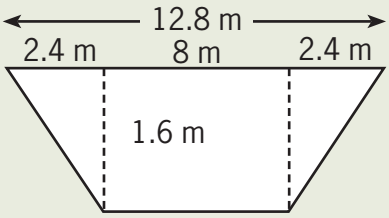

8 m Width
Side View

Insulators (Heat and Frost)

Heat and Frost Insulators in the industrial sector install insulation and jacketing in facilities such as pulp mills, chemical plants, oil refineries, gas plants, shipyards and other manufacturing and processing industries. They insulate steam and process piping, steam turbines, large boilers, storage tanks, heat exchangers and vessels. Heat and Frost Insulators in the commercial and institutional sectors work in hospitals, schools, high rise offices and residential towers. They insulate HVAC and plumbing systems, install fire-stopping systems and apply heat tracing.

Activities

Each of the three activities in this section addresses a different topic.

- Using an Imperial Scale Ruler
  Use the 1/2", 1/4", 1/8" and 1/16" scale to measure lines
- Using Drawings
  Locate information in a set of plumbing drawings
- Calculating Cone-Shaped and Square-Based Frustrums
  Practice calculating the volume, lateral area and surface area.

National Occupational Analysis (NOA)

The NOA has identified the following tasks as being required for a fully competent tradesperson in this trade:

- Interprets specifications and drawings
  - Knowledge of types of drawings such as mechanical, architectural, structural and electrical
  - Knowledge of location of specification and drawings
  - Ability to interpret symbols found on blueprints
  - Ability to use a scale ruler
  - Ability to read drawing components such as schedule, scales, details and legend
- knowledge of mathematical formulas such as basic geometry and converting decimals to fractions

- knowledge of plumbing systems such as hot, cold, recirculation water, and rainwater leaders
- ability to calculate the amount of insulation

Essential Skills Highlights

These activities combine Document Use and Numeracy skills at Level 4.

Document Use

- Locate and integrate multiple pieces of information from complex information displays including drawings, legends, symbols and abbreviations
- Use specialized knowledge such as trade terms and abbreviations

Numeracy

- Make multiple steps of calculation
- Use considerable translation to turn a problem into a set of mathematical operations using a combination of formulae

Using Drawings

Use the Government of British Columbia Department of Public Works P-1, P-2 and P-3 to answer the following questions.

Note: The three drawings have been shrunk to half size. Use the scale 1/16" = 1' for all takeoffs.

1) The type of drawing is always identified in the lower right hand corner of the drawing. What type of drawing does P-1 identify?

2) Draw the line used to represent domestic hot water.

3) Draw the line used to represent domestic cold water.

4) Write the abbreviation for each of the following:

   Clean Out: _____

   Hot Water Recirculating: _____

   From Below: _____

   Rainwater Leader: _____

   Pressure Reducing Valve: _____

5) What is the size and location of the floor drain in the pump room on drawing P- 1? Use the bay lines to give the location.

6) What size rain water leader pipe is used on the first floor between bay lines G3 and J3?

Using an Imperial Scale Ruler

The scales commonly used on scale drawings are: 1/2" = 1', 1/4" = 1', 1/8" = 1' and 1/16" = 1'. The examples below show how to use each of these scales.

Example: The scale is 1/2" = 1'

1 Locate the scale used in the drawing on the scale ruler.

2 Line up the 0 with the right end of the line. The scale is on the right so read the ruler from right to left.

3 Read the number of full feet. Read the scale marking closest to the left end of the line. Do not go beyond the end of the line.

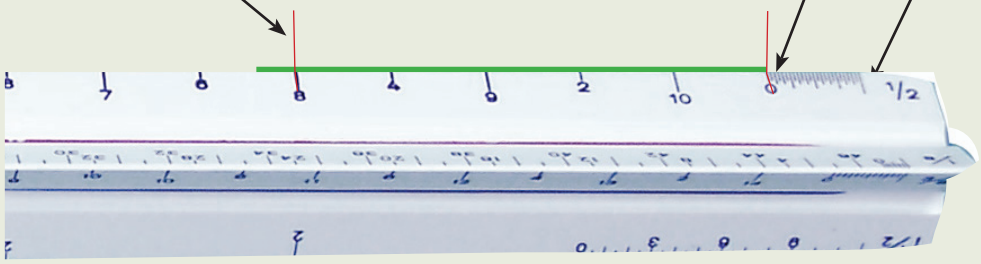

4 Move the scale ruler so this mark lines up with the end of the line.

5 Count the number of marks between the 0 mark and the right end of the line you are measuring. Multiply this number by the number of inches each mark represents.

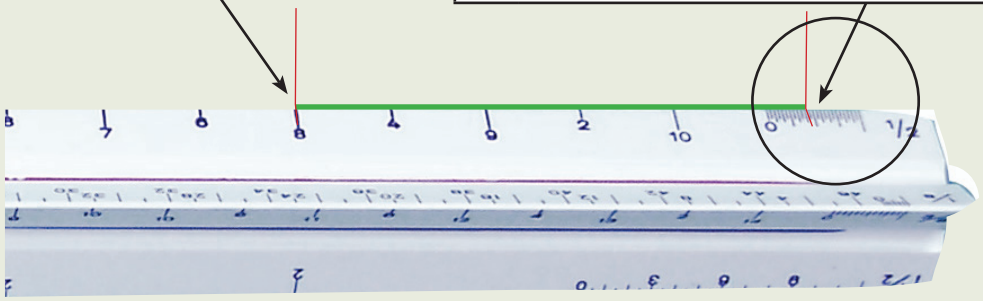

Note: Remember this represents 1' or 12".
Count the number of marks.
Divide 12 by the number of marks.
12" ÷ 24 = 0.5
This tells you in inches what each mark represents.
There are 24 marks so each mark represents
0.5" or 1/2.

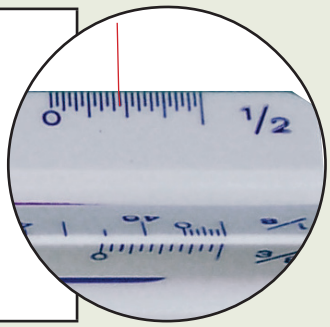

6 Combine the feet and inches to get the total length. 5' - $5\frac{1}{2}$"

Calculating Cone-Shaped and Square-Based Frustrums

A frustrum is a solid figure that has two bases that are parallel and different in size. This worksheet shows how to calculate cone-shaped and square-based frustrums.

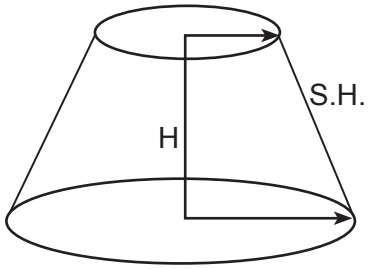

Lateral Area (L.A.): area of the sides

Total Surface Area (S.A.): L.A. + area of both bases

Slant Height (S.H.): Slant height is the actual measurement of the side of the frustrum.

Height (H) or True Height (T.H.): In some math books the height is called altitude. Height is the perpendicular distance between the bases. Perpendicular means the line forms a right angle with the base.

Calculating Volume, Lateral Area and Total Surface Area of Frustrums

Draw and label a diagram if there isn't one. Always follow the same steps.

Step 1: Calculate the volume.

$$V = \frac{H(B + b + \sqrt{B \times b})}{3}$$

B = area of big base
b = area of little base

Step 2: Calculate lateral area.

L.A. = average perimeter × S.H.

Step 3: Calculate total surface area.

S.A. = L.A. + area of both base.

Example: 1

Calculate the volume, lateral area and surface area of the cone-shaped frustrum in the diagram. Round answers to three decimal places.

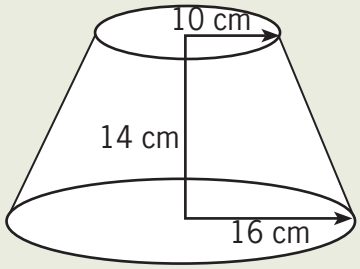

Step 1: Calculate the volume.

Write the formula.

$$V = \frac{H(B + b + \sqrt{B \times b})}{3}$$

Ironworkers

There are three designations within this trade: Reinforcing, Generalist and Structural/Ornamental. Typically ironworkers fabricate, construct and join scaffolding, structural steel buildings, bridges, ornamental ironwork and pre-cast structures. They erect structural steel components, reinforce steel, post tension tendons, install conveyors and robotic equipment, and sometimes perform reconstructive work on existing structures.

Activities

The five activities in this section provide strategies and practice calculating weight, using placing drawings, and understanding specifications and standards.

- Reinforcing Ironworker Blueprint Exercise
- Calculating Weight Using Area
- Estimating Weights of Rebar
- Reading Specifications
- Reinforcing Steel Manual of Standard Practice

National Occupational Analysis (NOA)

The NOA has identified the following tasks as being required for a fully competent tradesperson in this trade:

- Interprets drawings and specifications.
  - Knowledge of types of drawings such as placement drawings, structural drawings, architectural drawings and bar list fabrication
  - Knowledge of abbreviations and technical vocabulary
  - Ability to interpret drawing symbols
- Matches load to lift capability.
  - Knowledge of basic geometry
  - Knowledge of weights and measures
  - Ability to calculate weights of loads

- Bends material.
  - Knowledge of reinforcing material such as rebar, welded wire mesh fabric and composite material
  - Knowledge of material specifications

Essential Skills Highlights

These activities combine Reading, Document Use and Numeracy skills at Level 4.

Reading, Document Use

- Locate and integrate information from complex information displays including tables and drawings
- Use specialized knowledge such as trade terms, abbreviations and symbols

Numeracy

- Make multiple steps of calculations
- Translate problem into a set of mathematical operations using several steps of calculation and a combination of formulae

Reinforcing Ironworker Blueprint Reading

Use the Concrete Median Pole drawing and placement sheets to answer the following questions. Write your answers in the space provided.

1) What type of drawing is this?

2) List the two views used in the drawing.

3) Define the following abbreviations that are used on this drawing.
   a) BLL
   b) BUL
   c) TLL
   d) TUL
   e) TYP
   f) EE
   g) ES
   h) EW

4) What is the size and dimension of the highchairs?

5) What do the first two digits in the bar mark represent?

6) What type of rebar is used in the upper pedestal?

7) How many 15011s are required?

8) Draw the shape of 15004. Label with the dimensions.

Calculating Weight Using Area

To calculate weight based on area:

- Square feet (ft^2): Weight = area × thickness in inches × 40.833 lbs/ft^2
  - Calculate the area in ft^2
  - Convert area to weight
    1 ft^2 by 1" thick = 40.833 lbs
- Square metre (m^2): Weight = area × thickness in millimetres × 7.85 kg/m^2
  - Calculate the area in m^2
  - Convert area to weight
    1 m^2 by 1 mm thick = 7.85 kg

Imagine taking a cubic foot of steel and slicing it into 1 inch thick slices.
Since 1 foot = 12 inches, you would have 12 slices that are 1 ft × 1 ft × 1 inch.

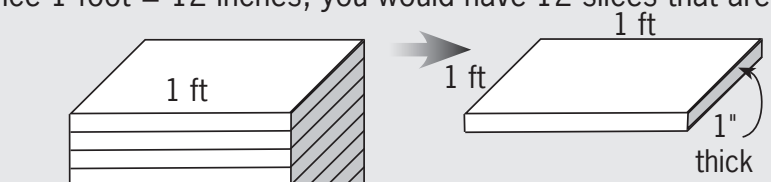

One slice of this cubic foot of steel is a sheet 1" thick, with an area of 1 ft^2. This plate of steel is only 1/12 of the weight of a cubic foot of steel.

490 lbs ÷ 12 inches = 40.833 lbs per inch of thickness of steel plate.

Steel plate that is less than 1" thick will be a fraction of the weight. For example, steel plate that is 1/2" thick will weigh 1/2 as much as 1" plate.
1 ft^2 of 1/2" thick steel plate = 1/2 × 40.833 lbs = 20.4165 lbs = 20.417 lbs

The same process is used in the metric system. A cubic metre of steel is "sliced" into 1 mm slices.
Since 1 metre = 1 000 mm, you would have 1 000 slices that are 1 m × 1 m × 1 mm.

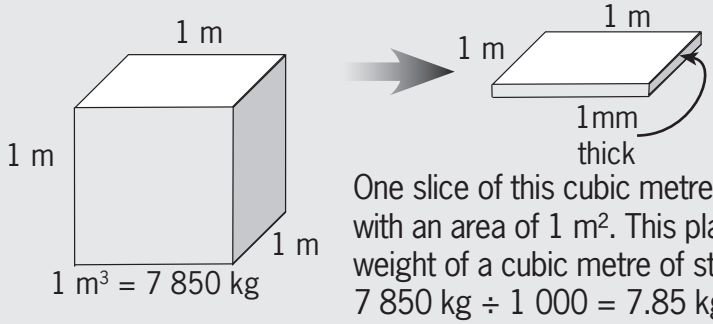

One slice of this cubic metre of steel is a sheet 1 mm thick, with an area of 1 m^2. This plate of steel is 1/1000 of the weight of a cubic metre of steel.
7 850 kg ÷ 1 000 = 7.85 kg per mm of thickness of steel plate

Steel plate that is more than 1 mm thick will be a multiple of the weight.
For example, plate that is 5 mm thick will weigh 5 times as much as 1 mm plate.

1 m^2 of 5 mm plate = 5 × 7.850 kg = 39.25 kg

12) Calculate the weight of the W360 wide flange beam.
Show all work when calculating flanges and web.

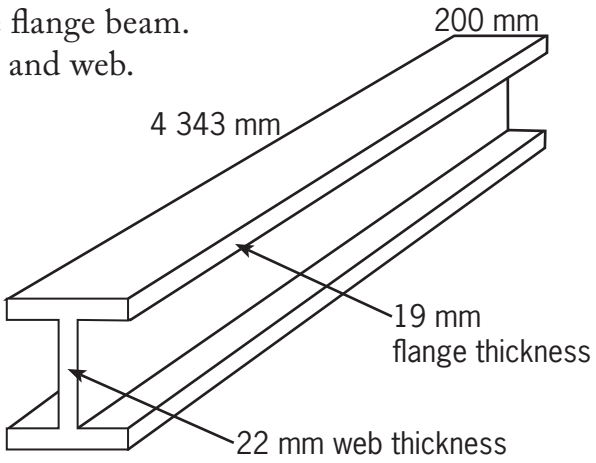

Flanges =

Web =

Total weight of beam = _____

13) Calculate the total weight of this W16 beam.
Show all work when calculating flanges and web.

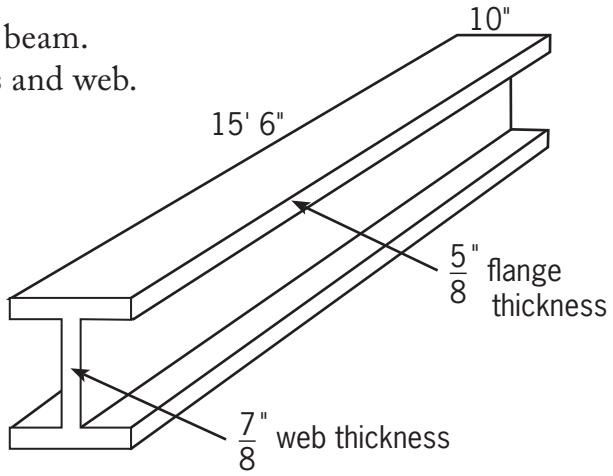

Flanges =

Web =

Total weight of beam = _____

Estimating Weights of Rebar

Rebar placers and fabricators use placing sheets to determine quantities, measurements and types. Truck drivers use placing sheets as bills of lading. Use the Placing Sheet to answer the following questions. Use your bar calculation factors based on 0.785 kg/m. Round off final answers to the nearest whole kilogram.

Practice

1. How many Type 17s labelled 15002 are there?

2) What is the difference between a Type 17 15001 and a Type 17 15003?

3) What size bar is used for the 15001s?

4) Draw the shape of a 15003. Label with the dimensions.

5) What shape is the bar with the overall dimensions of 1850?

6) Calculate the weight of a bundle of 15001s.

7) Calculate the weight of a bundle of 25005s.

8) Calculate the total weight of all the straight bars.

Painters and Decorators

Painters and decorators prepare surfaces and apply a variety of decorative and protective finishes in the construction and maintenance of residential, commercial, institutional and industrial sites.

Activities

This activity provides practice calculating the amount of wallpaper covering to order for installation in regular and irregular-shaped rooms.

- Estimating Quantities of Wallpaper

National Occupational Analysis (NOA)

The NOA has identified the following tasks as being required for a fully competent tradesperson in this trade:

- Plans the job
  - Ability to estimate materials and equipment required such as paint, brushes, rollers, wall coverings and drop sheets

Essential Skills Highlights

These activities combine Document Use and Numeracy skills at Level 2.

Document Use

- Locate and integrate information on diagrams

Numeracy

- Make multiple steps of calculations
- Translate problem into a set of mathematical operations using several steps of calculations and a combination of formulae.

Estimating Quantities of Wallpaper

Example 1:

Calculate the number of bolts of wallpaper needed to cover the walls of the following room. The walls are 9 feet high. The wallpaper bolt contains 2 single rolls of paper, totaling 63 square feet.

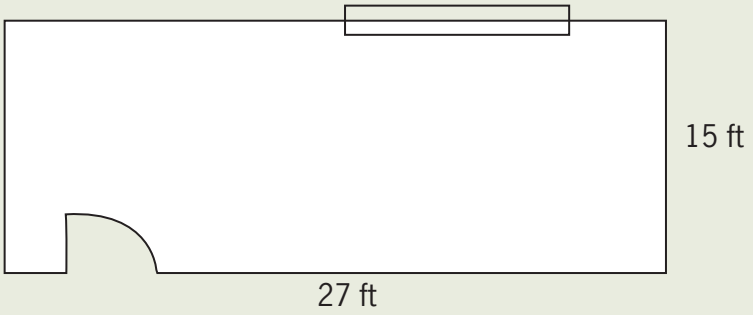

Step 1: Calculate the perimeter of the room to be papered.

$P = 2(L + W)$

$= 2(27' + 15')$

$= 2(42')$

$= 84'$

Step 2: Calculate the area to be papered.

A = Perimeter × ceiling height

$= 84' \times 9'$

$= 756\ ft^2$

Step 3: Calculate number of bolts of wallpaper needed including 20% extra for waste.

$756\ sq\ ft \times 0.20 = 151.2\ ft^2$

$756\ ft^2 + 151.2\ ft^2 = 907.2\ ft^2$

$907.2\ ft^2 \div 63\ ft^2/bolt = 14.4$ bolts

Round up to the nearest whole number of bolts.

Order 15 bolts.

Note: Wallpaper bolts may contain 1, 2, or 3 single rolls. Therefore, the square footage will vary. Consult the manufacturer's book or wallpaper label for this information before ordering.

3) Calculate the number of bolts of wallpaper needed to cover the walls of the following room. The walls are 12 feet high. The wallpaper bolt contains 2 single rolls of paper totaling 68.5 square feet.

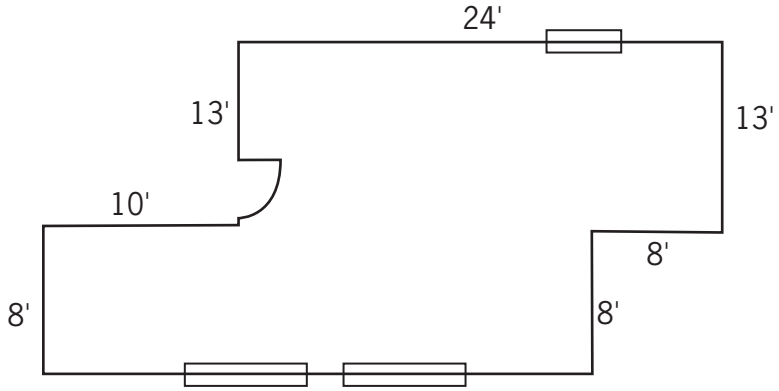

4) Calculate the number of bolts of wallpaper needed to cover the walls of the following room. The walls are 12 feet high. The wallpaper bolt contains 3 single rolls of paper totaling 96 square feet.